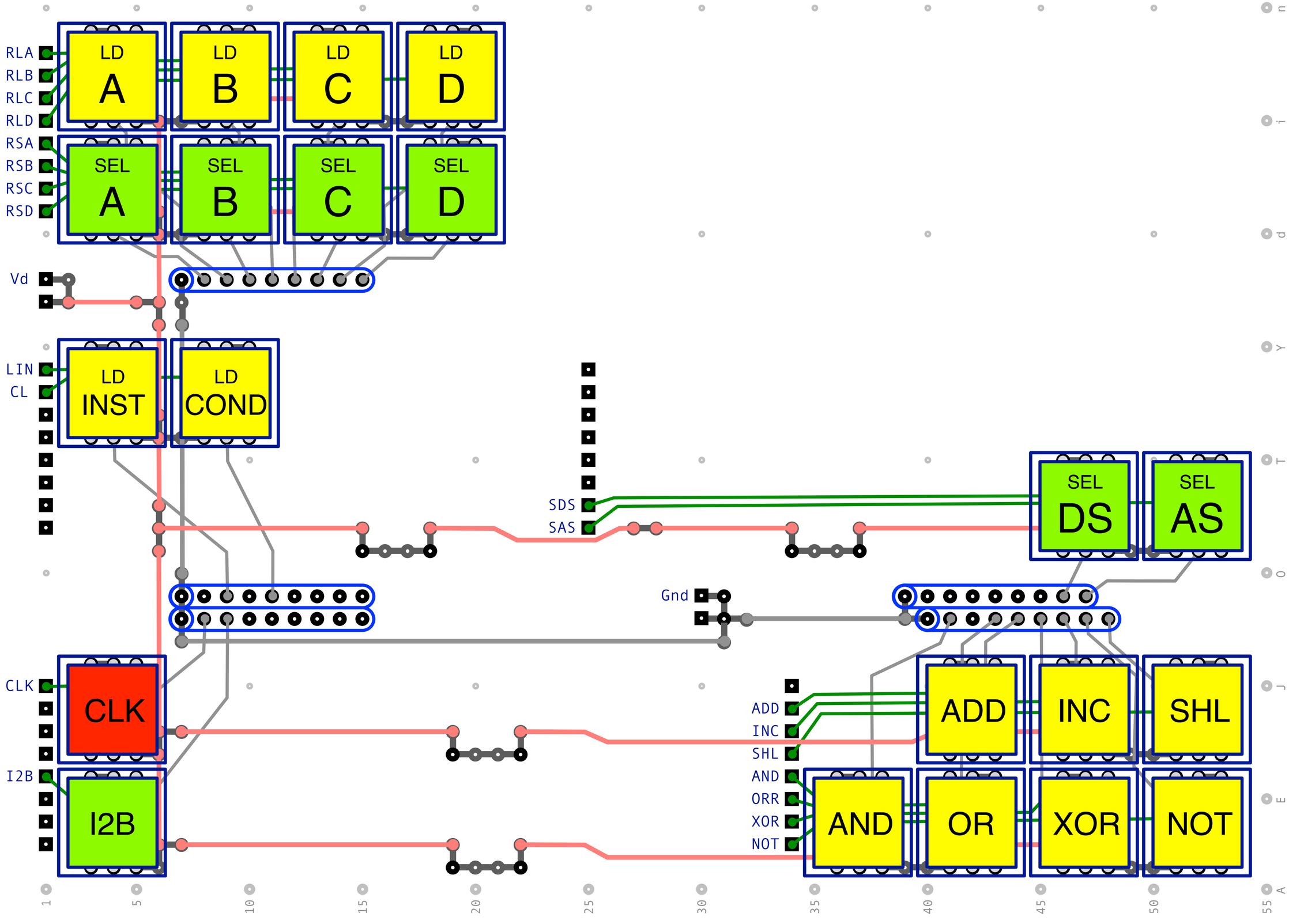
RLA
RLB
RLC
RLD
RSA
RSB
RSC
RSD
LD A
LD B
LD C
LD D
SEL A
SEL B
SEL C
SEL D
Vd
LIN
CL
LD INST
LD COND
SDS
SAS
SEL DS
SEL AS
Gnd
CLK
CLK
I2B
I2B
ADD
INC
SHL
AND
ORR
XOR
NOT
ADD
INC
SHL
AND
OR
XOR
NOT
1
5
10
15
20
25
30
35
40
45
50
55