Sheet 1: Backplane W

Main Board

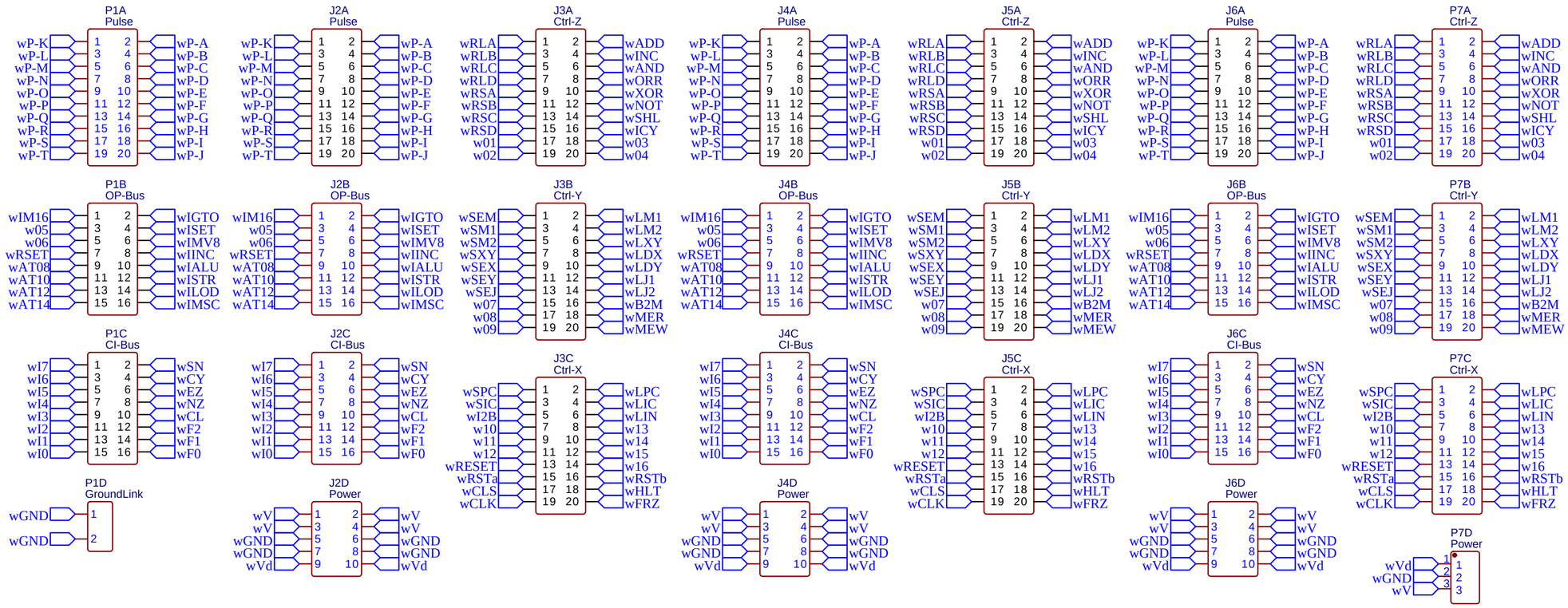

Daughter Board

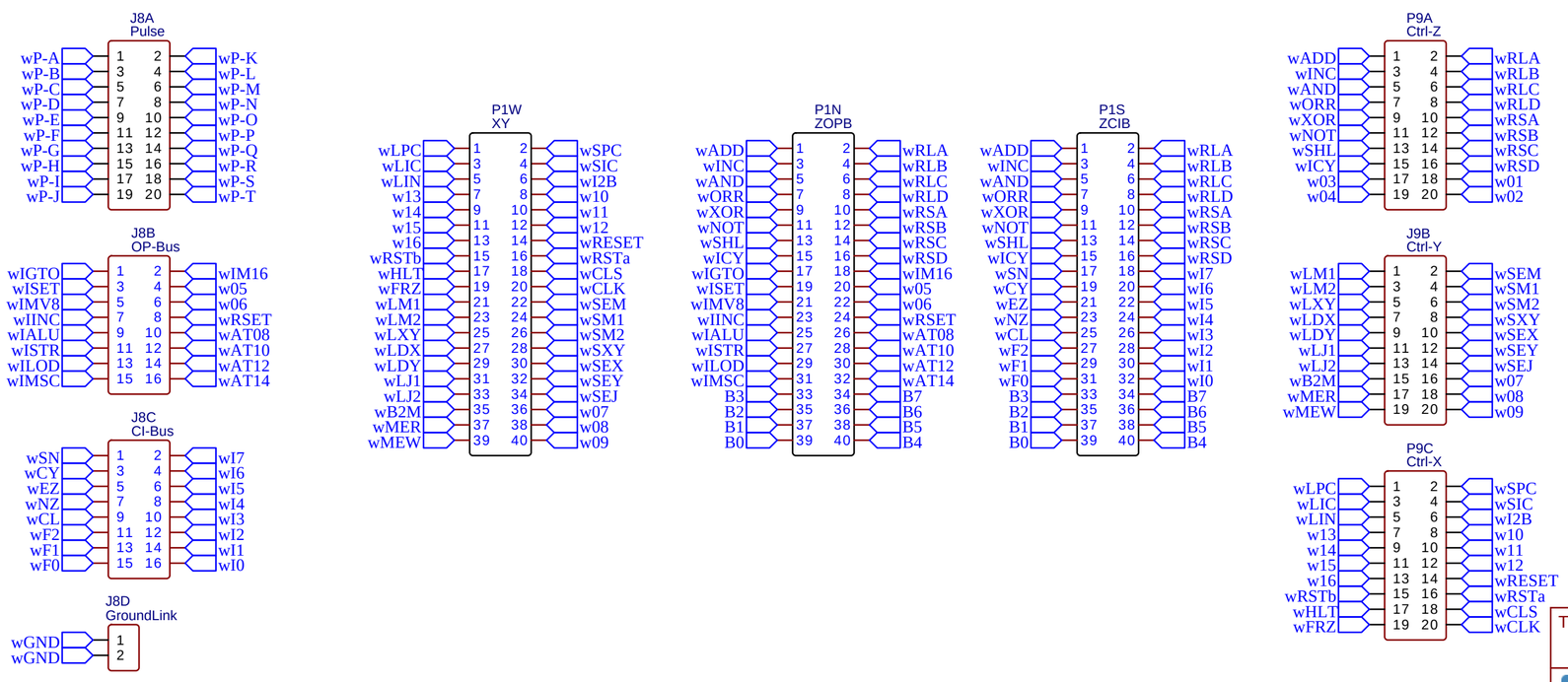

TITLE: Relay Computer : Backplane W	REV: 1.0
Relay Computer — Company: Paul Law	Sheet: 1/1
Date: 2019-10-19 Drawn By: paul_6392	